Norman Day

IGBT IGBT

IGBT

IGBT

Cies Cgc Cge IGBT

Coes Cgc

Cce Vce Cres

Cgc Vge

Vce IGBT IGBT

Cies Coes Cres

Cies Coes Cres

IGBT

1

2 IGBT

AB

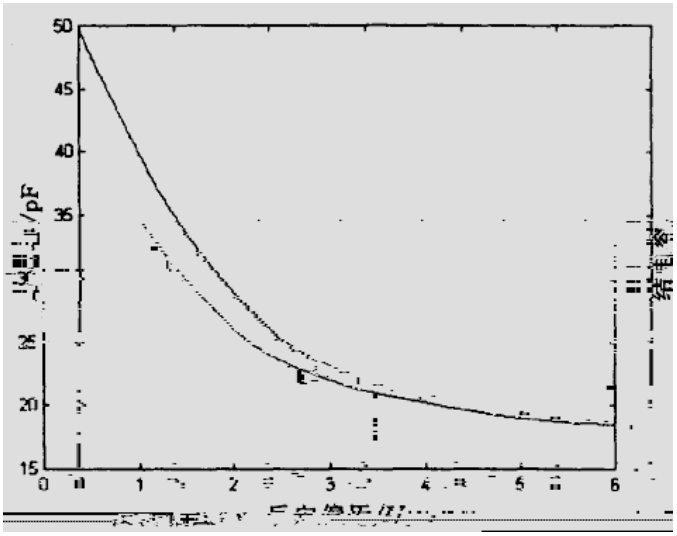

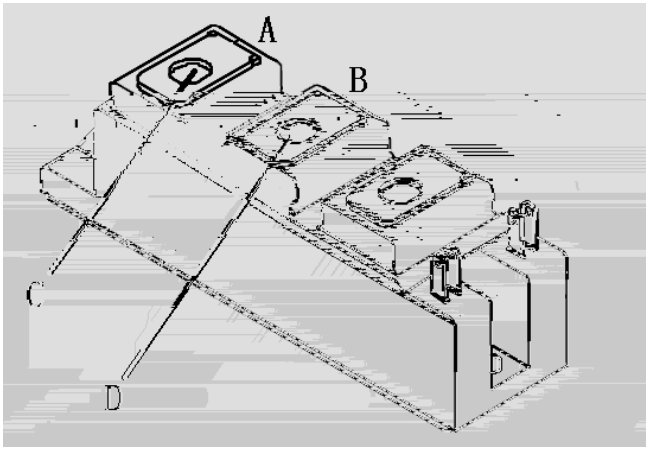

IGBT

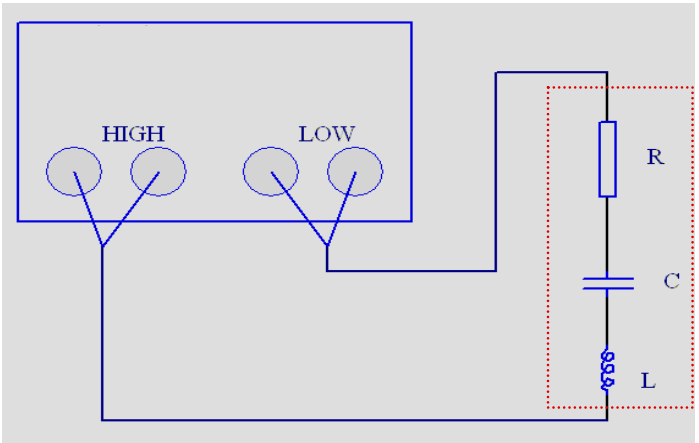

3.

RLC

$\frac{U}{I}\angle\theta = R + L\omega j + \frac{1}{C\omega j}$, $\omega = 2\pi f$ $\frac{U}{I}\cos\theta + j\frac{U}{I}\sin\theta = R + (L\omega - \frac{1}{C\theta})j$ $\omega = 2\pi f$

$\frac{U}{I}\sin\theta = L\omega - \frac{1}{C\omega}$

C

L L

nH C nF f =1MHZ

$\frac{1}{C\omega}$ L 10^3 10^6 L

4.

Cies

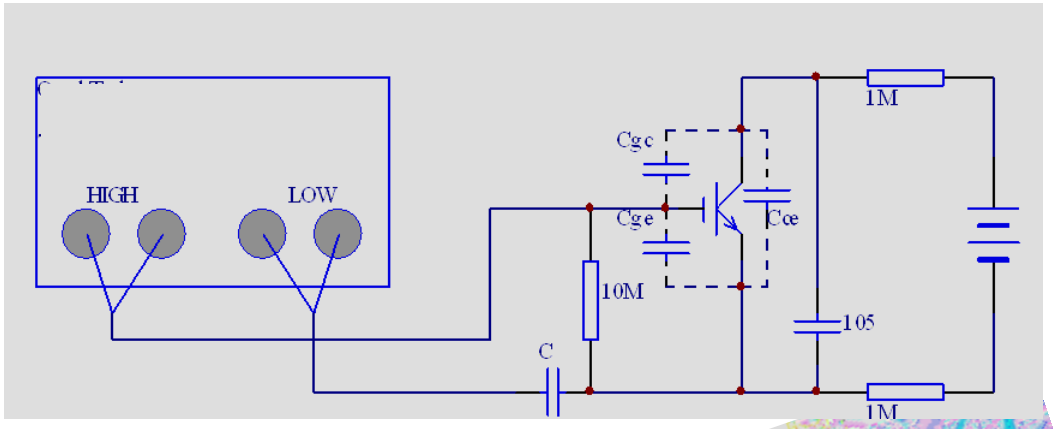

Cies

IGBT

Cies Cies Cies=Cge+Cgc

IGBT Cce

$$\therefore C2 = Cgc + C1' \qquad C2' = Cgc + \frac{Cce \times Cge}{Cce + Cge}$$

Cres

Cs

$$\therefore \frac{1}{Cs} = \frac{1}{C} + \frac{1}{C2'} \qquad C2' = \frac{C \times Cs}{C + Cs}$$

Cies

Coes

$$Cgc + Cge = Cies$$
$$Cgc + Cce = Coes$$
$$C2' = Cgc + \frac{Cce \times Cge}{Cce + Cge}$$

$$\therefore Cres = Cgc = C2' - \sqrt{(Cies - C2')(Coes - C2')}$$

IGBT

Cies

Coes

Cres

IGBT

Cies

Coes

Cres

IGBT

Cies

Coes

Cres

IGBT