

*ƒ6½7…<¸.G56„3 1Š:}

1.

PCS

" "

PCS

2.

88%-91%

95%

3.

4.

5.

	3K	16K
	ANPC	INPC TNPC
	C2,C6.1	L6

▪

ANPC

D2D3

(PF=-1) Vf

Vf IGBT

(PF=1) IGBT



IGBT (D1D4D5D6) Vf

(D2D3) Vf

▪

GD800HFA120C2S_B12 GD800HFA120C2S_B50

B12( ) B50( ) Vf 0.2V

	IGBT Module	Modulation Mode	DC Link	Output	Switching	Output	RG	T2 T3	RG	T1 T4 T5 T6	Modulation Index	Power Factor	Tc
			Voltage	Current (rms)	Frequency	Frequency	ON(	OFF(	ON(	OFF(	D	cos(	( )
			V	A	(Hz)	(Hz)							
1	GD800HFA120C2S_												

▪

	T1/T4	T1/T4	T1/T4	T2/T3	T2/T3	T2/T3	T5/T6	T5/T6	T5/T6	D1/D4	D1/D4	D1/D4	D2/D3	D2/D3	D2/D3	D5/D6	D5/D6	D5/D6	
	Pcond	Psw	Ptot	Pcond	Psw	Ptot	Pcond	Psw	Ptot	Pcond	Psw	Ptot	Pcond	Psw	Ptot	Pcond	Psw	Ptot	Ptot
	(W)	(W)	(W)	(W)	(W)	(W)	(W)	(W)	(W)	(W)	(W)	(W)	(W)	(W)	(W)	(W)	(W)	(W)	(W)
1	0	0	0	0	0.00	0.00	152	391	543	219.8	43.72	263.5	410.7	1.33E-15	410.70	0	0	0	1217.22
2	0	0	0	0	0.00	0.00	152	397.1	549.1	219.8	43.72	263.5	366.5	1.46E-15	366.50	0	0	0	1179.12

T1/T4	D1/D4	T2/T3	D2/D3	T5/T6	D5/D6
Tj( )	Tj( )	Tj( )	Tj( )	Tj( )	Tj( )
90	127.9	90	150.1	133.1	90
90	127.9	90	143.4	133.1	90

Tjmax 6.7

SiC SBD

.

99%

Si

SiC Mos

SiC SBD

SiC SBD

		Si-FRD	SiC-SBD	
Vf	If=140A Tj=25	1.82	1.80	V
Vf	If=140A Tj=150	1.77	2.42	V
Eon	VCC=600V, IC=140A Tj=25	18.41	11.36	mj
Erec	VCC=600V, IC=140A Tj=25	3.02	0.005	mj
Eon	VCC=600V, IC=140A Tj= ;			

▪

	T1/T4	T1/T4	T1/T4	T2/T3	T2/T3	T2/T3	D1/D4	D1/D4	D1/D4	D2/D3	D2/D3	D2/D3	D5/D6	D5/D6	D5/D6	
	Pcond	Psw	Ptot	Pcond	Psw	Ptot	Pcond	Psw	Ptot	Pcond	Psw	Ptot	Pcond	Psw	Ptot	Ptot
	(W)	(W)	(W)	(W)	(W)	(W)	(W)	(W)	(W)	(W)	(W)	(W)	(W)	(W)	(W)	(W)
1	55.36	149	204.3	103.5	22.81	126.30	0.8848	5.809	6.694	0.8858	0	0.8858	55.57	66.99	122.6	

SiC **Si** **Si**

31% **29.5%**

( )			
	125kW	215~430kW	1.25x~1.725xMW
	GD450MMA75L6Q GD600TLA120L6Q GD600TLA120L6Q_B4	GD275MJS120L6S GD500MMA120L6Q GD500MMA120L6Q_B4 GD600MHA110L6Q GD600MHA110L6Q_B4 MD24TBL120L6S MD12TBL120L7S	GD600HFX120C6SA* GD800HFA120C2S_B12 GD800HFA120C2S_B50 GD800HFA120C2SD GD650HFA120C6SD GD800HFA120C6SD GD800APA120C6S GD800ANA120C6S

. 125KW(1100V) -INPC

GD450MMA75L6Q	I-NPC	750V	450A	L6		125kW

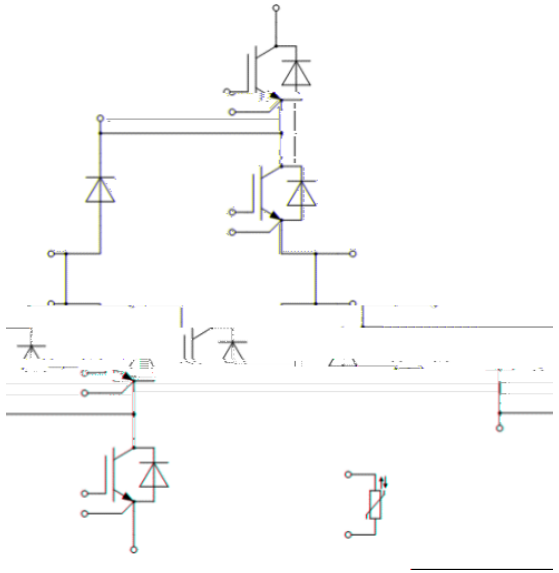



. 125KW(1100V) -TNPC

GD600TLA120L6Q	T-NPC	1200V	600A	L6		125kW+
GD600TLA120L6Q_B4	T-NPC	1200V	600A	L6		

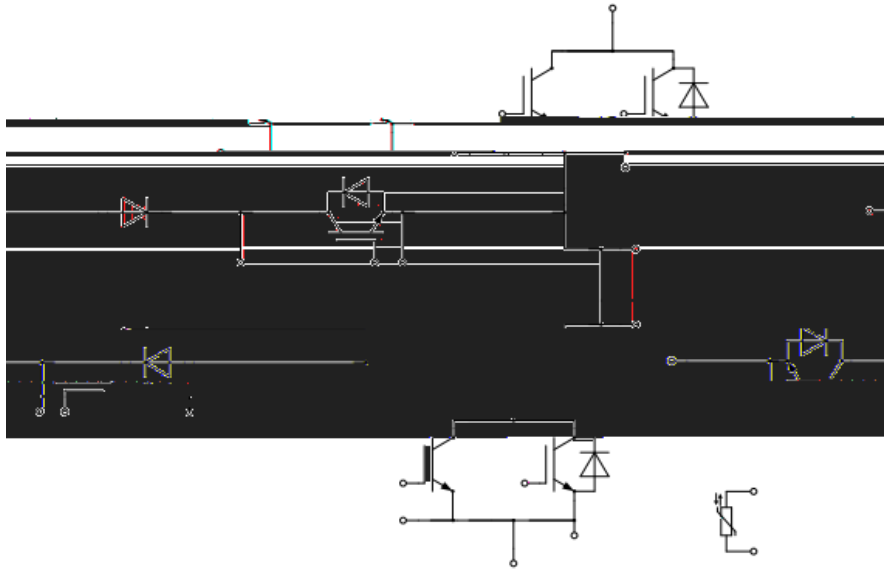



. 125KW - (INPC vs. TNPC)

	IGBT T1/T4	Diode D1	Diode D4	IGBT T1/T4	IGBT T1/T4	IGBT T1/T4	Diode D1	Diode D1	Diode D1	Diode D4	Diode D4	Diode D4	IGBT T2	IGBT T3	Diode D2/D3	IGBT T2	IGBT T2	IGBT T2	IGBT T3	IGBT T3					

. 215KW -1100V

GD600MHA110L6Q	I-NPC	1100V	600A	L6		215kW+/430kW+
GD600MHA110L6Q_B4	I-NPC	1100V	600A	L6		

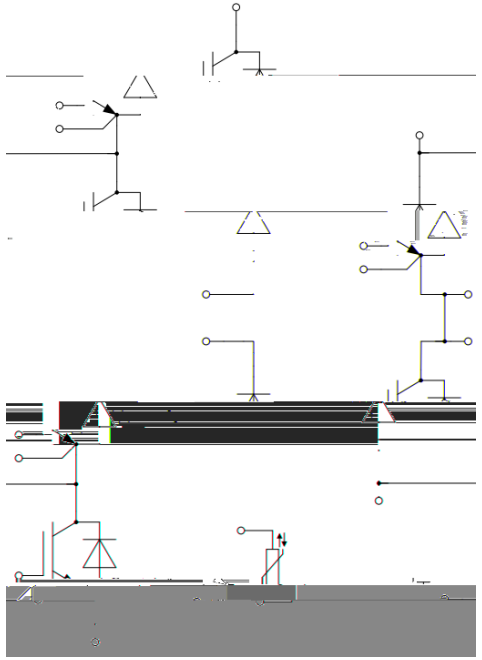



. 215KW -1200V

GD500MMA120L6Q	I-NPC	1200V	500A	L6		215kW/430kW
GD500MMA120L6S_B4	I-NPC	1200V	500A	L6		

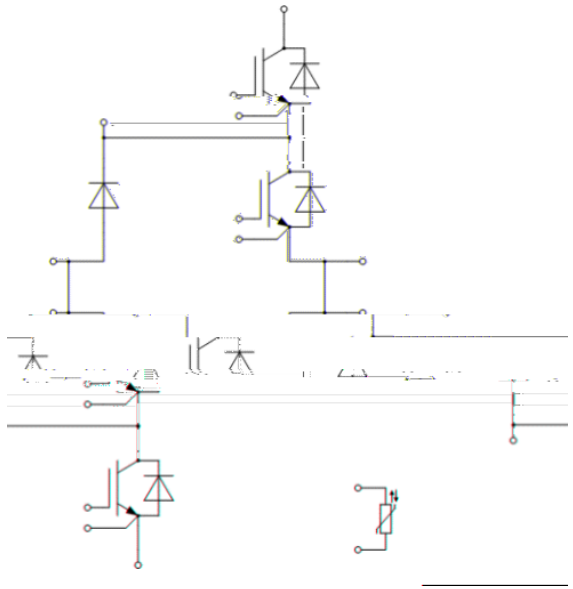



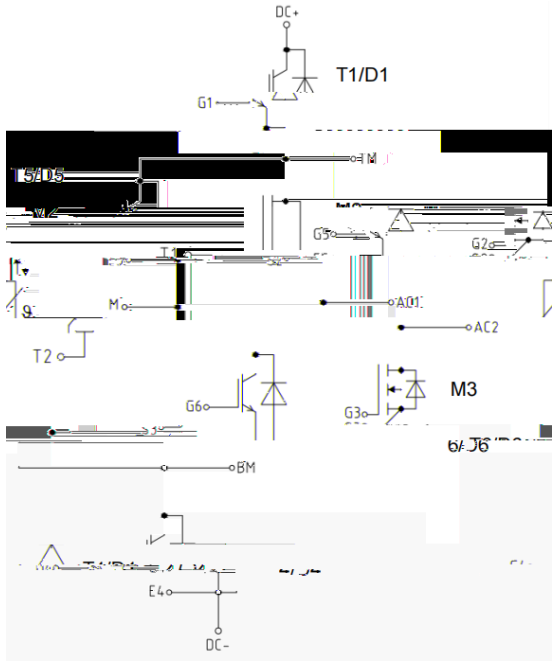
DC+
T1/D1
G1
T2
G6
M3
G3
BM
E4
DC-

T1/T4 /P <</MCID 15>> BDC 0.914 0.922 Cmpt 0.0 0.1 Ang 0 959.859Ar76 222.7

. 215KW - (1100V vs. 1200V)

. 215KW - (1100V vs. 1200V)

	T1/T4	T1/T4	T1/T4	T2/T3	T2/T3	T2/T3	D1/D4	D1/D4	D1/D4	D2/D3	D2/D3	D2/D3	D5/D6	D5/D6	D5/D6	
	Pcond	Psw	Ptot	Pcond	Psw	Ptot	Pcond	Psw	Ptot	Pcond	Psw	Ptot	Pcond	Psw	Ptot	Ptot
	(W)	(W)	(W)	(W)	(W)	(W)	(W)	(W)	(W)	(W)	(W)	(W)	(W)	(W)	(W)	(W)
1	78.18	238.3	316.5	112.3	7.58	119.90	0.0616	4.114	4.176	0.06806	0	0.06806	37.32	128.3	165.6	1212.488
2	0.661	6.558	6.624	36.97	273.10	310.10	78.75	96.9	175.7	69.86	0	69.86	37.66	6.586	44.24	1213.048
3	71.09	208.8	279.8	102.1	5.10	107.20	0.0633	0.8013	0.8646	0.07559	0	0.07559	38.37	46.38	84.75	945.3804
4	0.05694	5.501	5.558	33.34	197.50	230.90	94.45	36.5	130.9	80.91	0	80.91	38.49	1.303	39.79	976.116

1100V **1200V**

19.5%. **22%**

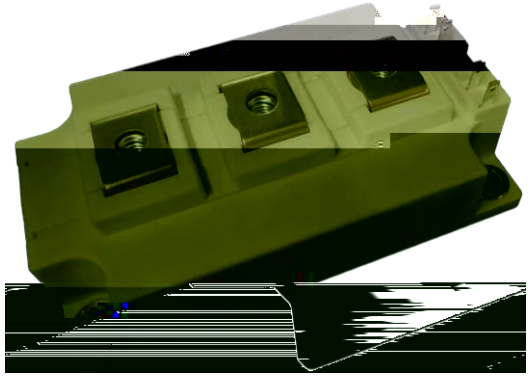

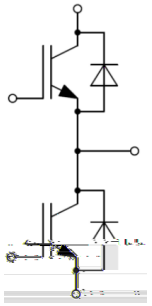



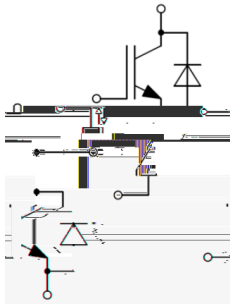

GD600HFX120C6SB	2-Pack	1200V	600A	C2		800KW~5MW
GD800HFA120C2S_B12	2-Pack	1200V	800A	C2		
GD800HFA120C2S_B50	2-Pack	1200V	800A	C2		
GD800HFA120C2SD	2					

1500V IGBT

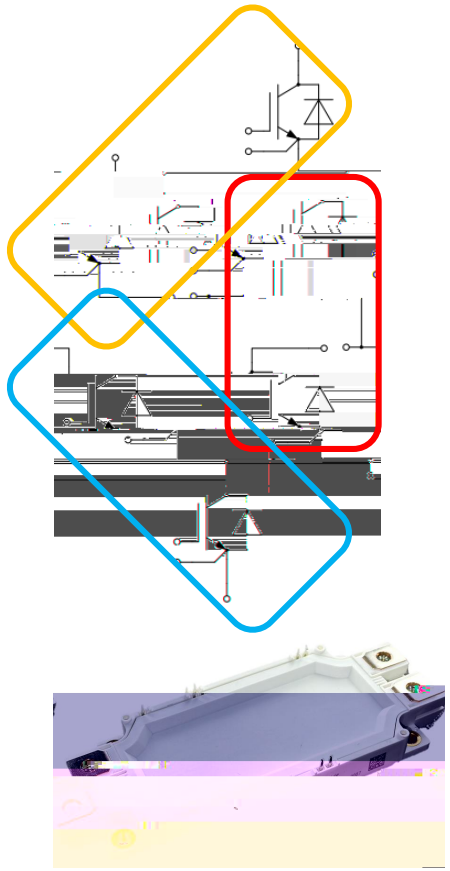

3 X 1200V800A







2 X 1200V800A

■

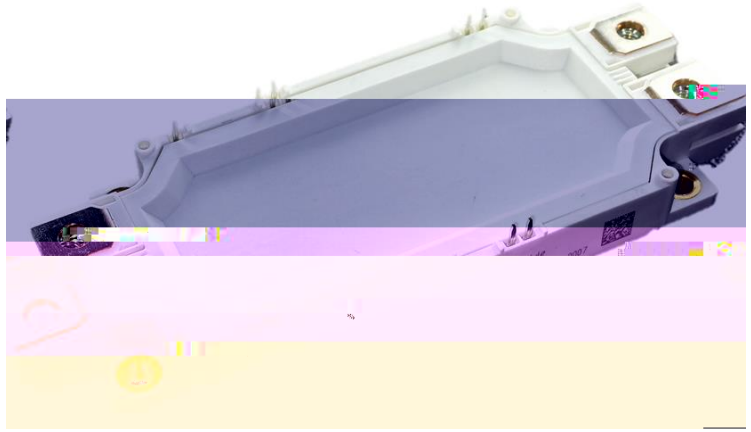

0O ‡Û ° ¢ O ‡